VARIO S 400
Sintering Furnace

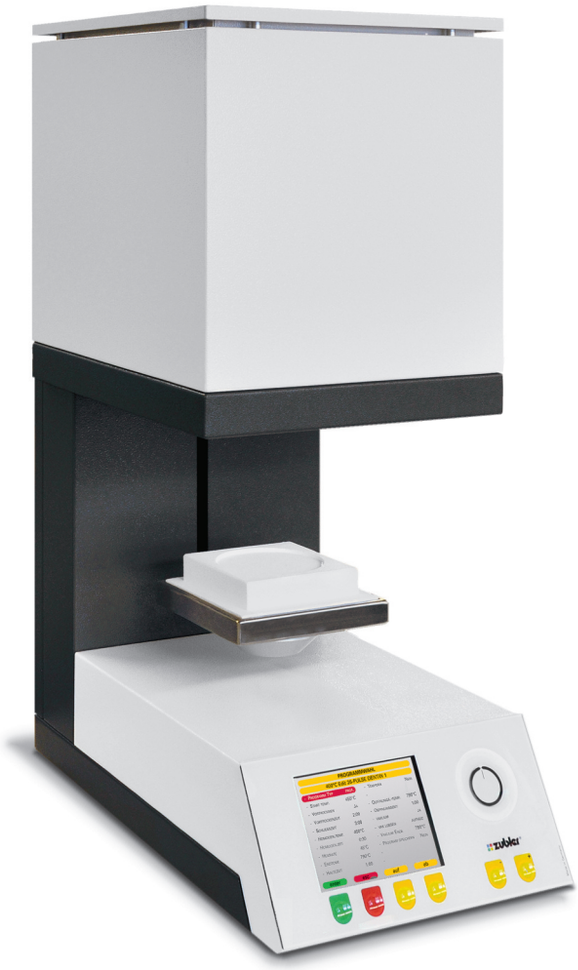

en

zubler®
dental & technik

Operating instructions 07-2019 www.zubler.de

Dental Servis
Serdar Ayısıt
0555 274 05 51

Dental
Servis
Serdar Ayısıt
0555 274 05 51

Contents

0 Introduction Page **4**

- **0.1 Conformity declaration**
- **0.2 General information**
- **0.3 Use within specifications**
- **0.4 Installing the appliance**
- **0.5 Initial oven setup**

1 Operation Page **8**

- **1.0 Display functions**
- **1.1 Run Programs**
- **1.2 Start with timer**
- **1.3 Edit programs**
  - 1.3.1 New/change program
  - 1.3.2 Copy/change program
  - 1.3.3 Move program
  - 1.3.4 Erase program
  - 1.3.5 Look at program
  - 1.3.6 New/change brand
  - 1.3.7 Erase brand
  - 1.3.8 USB transfer
- **1.4 Setup Oven**
  - 1.4.1 Diagnostic tests
    - ❶ Software version
    - ❷ Update software
    - ❸ Test lift
    - ❹ Factory Tests
  - 1.4.2 Customize country
  - 1.4.3 Adjust display
  - 1.4.4 Audio Beeps
  - 1.4.5 Set preview mode
  - 1.4.6 Regeneration program
  - 1.4.7 Customized Calibration

2 Maintenance Page **17**

- **2.1 Fuse**
- **2.2 Spare parts**
- **2.3 Technical explanation**

3 Data Page **19**

- **3.1 Technical data**
- **3.2 Included**

4 Safety warnings! Page **20**

5 Service Page **22**

Dear Laboratory Professional,

We are delighted that you chose the Zubler VARIO S 400 sintering furnace and hope that you will find it pleasant to work with. The constant further development of our technology is based on cooperation with experienced dental technicians. Our primary aim is to construct sintering furnaces of maximum quality, flexibility and sustainability. Performance and profitability are the basic prerequisites for this.

To fully enjoy the advantages this unit offers and to ensure trouble-free performance, please read these instructions carefully.

Dental Servis
Serdar Ayısıt
0555 274 05 51

0 Introduction

0.1 Conformity declaration

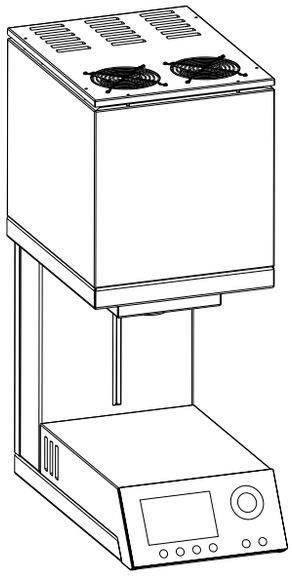

We, Zubler Gerätebau GmbH
Buchbrunnenweg 26
89081 Ulm-Jungingen

www.zubler.de

hereby declare that the product named below

VARIO S400

conforms to the regulations of the following EU directives:

2014/30/EC	EMV-Directive
2014/35/EC	Low-Voltage Directive
2006/42/EC	Machines Directive

This declaration loses its validity if the product is modified without our agreement.

Kurt Zubler
Managing Director

0.2 General information

The correct processing of different translucent zirconium dioxides places ever increasing demands on the dental technician. We help technicians by combining state-of-the-art technology with future-oriented processes in the VARIO S 400 sintering furnace. The software installed in the VARIO S 400 allows an individual firing process for all zirconium dioxides available on the market. The use of top quality materials prolongs the service life of the furnace and offers you reproducible results at the highest level over a period of many years. It is important to us that you can manufacture top quality dental prostheses for many years to come with the VARIO S 400 sintering oven. That's why we inform you of software updates or additional processing options. We are sure that you will have much success and will enjoy working with the sintering furnace, and we congratulate you on your choice.

Dental Servis
Serdar Ayısıt
0555 274 05 51

0.3 Use within specifications

- The VARIO S 400 furnace series was developed exclusively for the sintering of zirconium dioxides in their different forms (standard, translucent, full contour or dyed) and is intended only for these applications.
- All other uses require the written consent of Zubler Gerätebau GmbH.
- The user is liable for any damage resulting from use other than that intended.
- The manufacturer's warranty conditions apply.
- Use within specifications also includes following all the instructions in this operating manual.
- The appliance may be operated only by technical or trained personnel.
- Repairs may be carried out only by authorized service personal.
- Do not touch the control panel with wet or moist fingers.
- Please unpack the furnace carefully. It should be lifted/carried by two people. Always lift at the base of the unit; never lift the furnace using the chamber or the table guide.
- Do not actuate the control panel with hard and/or sharp objects.
- Never operate the furnace without the insulation base installed on the table.
- Do not reach with your hand between the furnace table and furnace chamber during operation. There is a danger of being crushed or burned.
- During operation, never reach underneath the furnace table and never place anything under the furnace table. The furnace table must not be blocked during the opening process.
- The cooling slits must not be covered or obstructed, otherwise the circulation of air is not guaranteed and the appliance could overheat.
- No liquids or objects may be allowed to enter the appliance or the vent openings, as it may cause a short-circuit.
- The furnace table has an electric drive and must be operated using the buttons on the glass touch control interface. Do not open or close the furnace table by hand.

Dental Servis
Serdar Ayısıt
0555 274 05 51

0.4 Installing the appliance

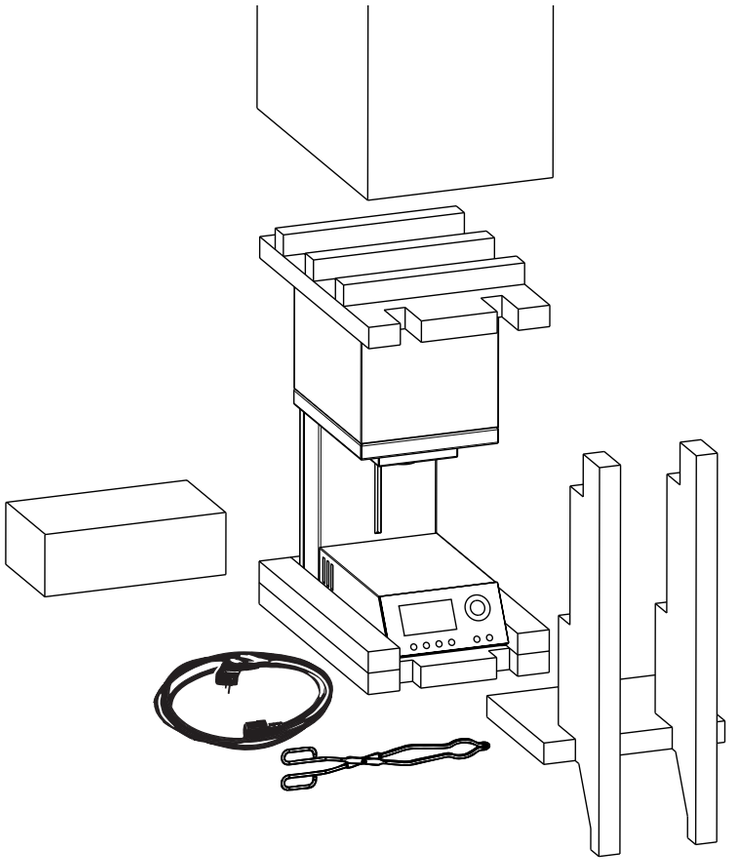

- Place the furnace on a stable, even and fireproof worktop.
- The area surrounding the sintering furnace should be free 30 cm/12 inches to the right, to the left, above and behind the appliance.
- Retain the original packaging in case you have to return the appliance in warranty or for service.
- Ensure that the room is well ventilated during furnace operation.
- Maximum room temperature 30°C / 86°F
- ventilation and cooling vents must not be covered or obstructed.

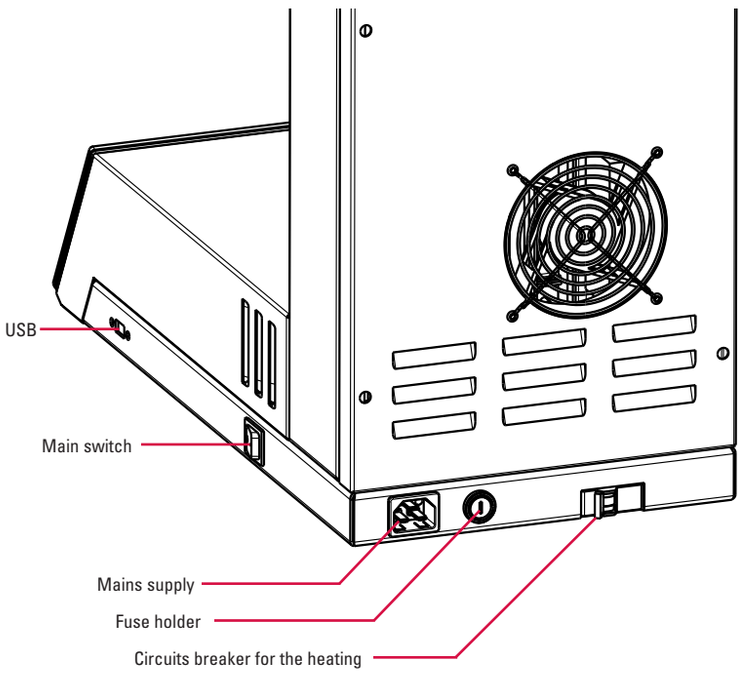

Preparation

- Keep the two firing bases at the ready for the further procedure

Power connection:

- The sintering furnace requires 230 V/50 Hz or 220 V/60 Hz (USA)
  1. Do not use extension cables
  2. Make sure the unit is plugged into a fuse protected circuit.
- The main switch should be in the "0" position.
- Circuit breaker for heating in the "ON" position.
- Connect the furnace to the power supply using the mains cable provided.
- Switch the furnace on at the main switch.
- After the furnace self-test has finished, press the yellow "Open" button.

Dental Servis
Serdar Ayısıt
0555 274 05 51

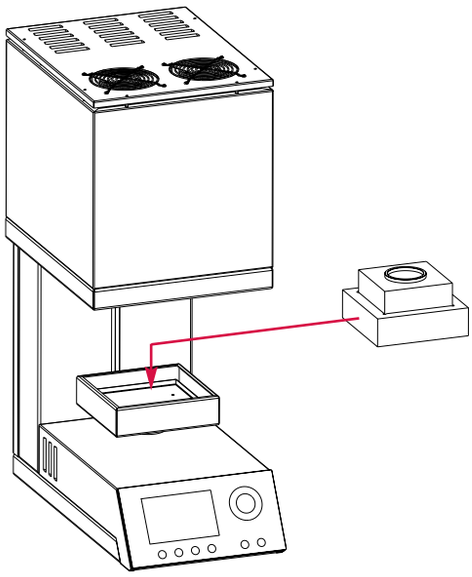

Once the lift is completely down, place the two insulation bases (see picture) on the lift plate.

0.5 Initial oven setup

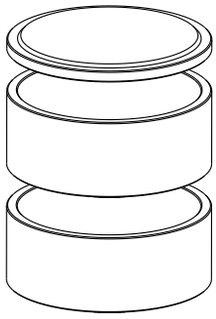

After switching the furnace on for the first time and inserting the two firing bases, execute the Regeneration program.

Main menu ⇒ Setup oven ⇒ Regeneration program

Dental Servis
Serdar Ayısıt
0555 274 05 51

1 Operation

1.0 Display functions

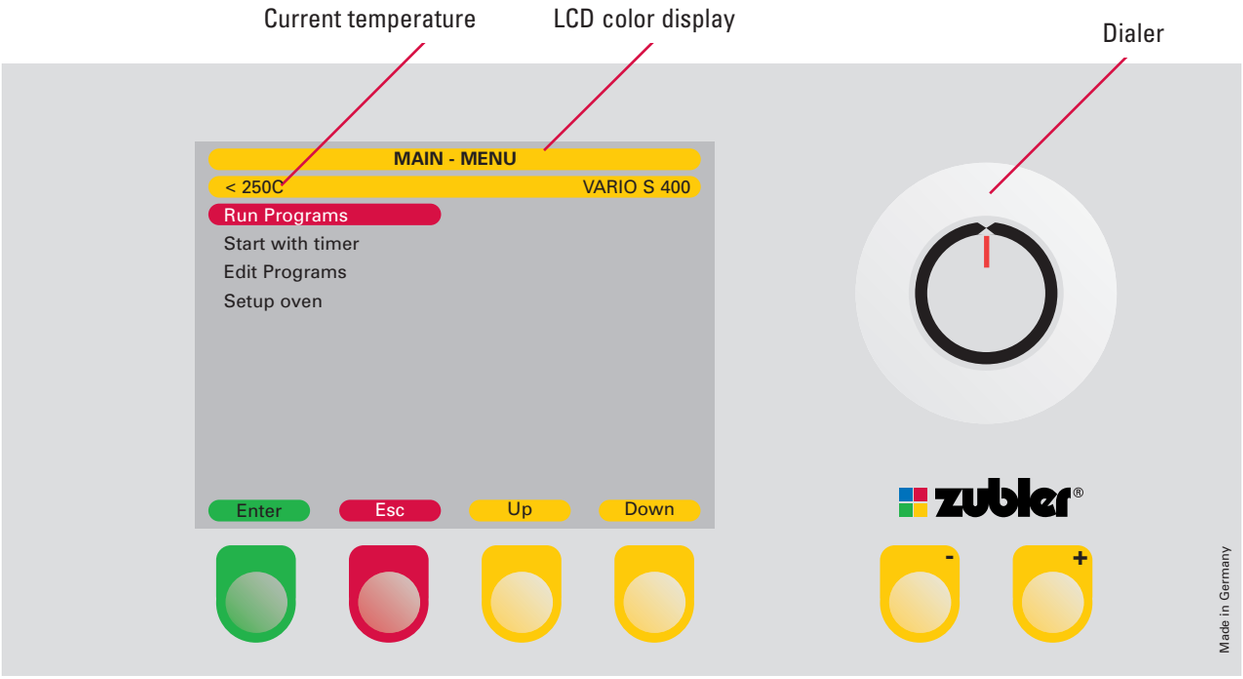

Section for selecting parameters:
Confirm / Cancel – key
Lift movement Up / Down

Section for changing values
Rapid selection (circle dialer)
Step by step (yellow keys)

Selection of the menu parameters

❶ After you have switched on The S400 for the first time, the main menu will appear on the display with the following four selectable menu items:

1.1	Run Programs
1.2	Start with timer
1.3	Edit Programs
1.4	Setup Oven

❷ Select the desired menu item using the dial or the +/- buttons.

❸ Press the green “Enter” Button to continue.

Pressing the red "ESC" button will take you one step back.

Dental Servis
Serdar Ayısıt
0555 274 05 51

1 Operation

1.1 Run Programs

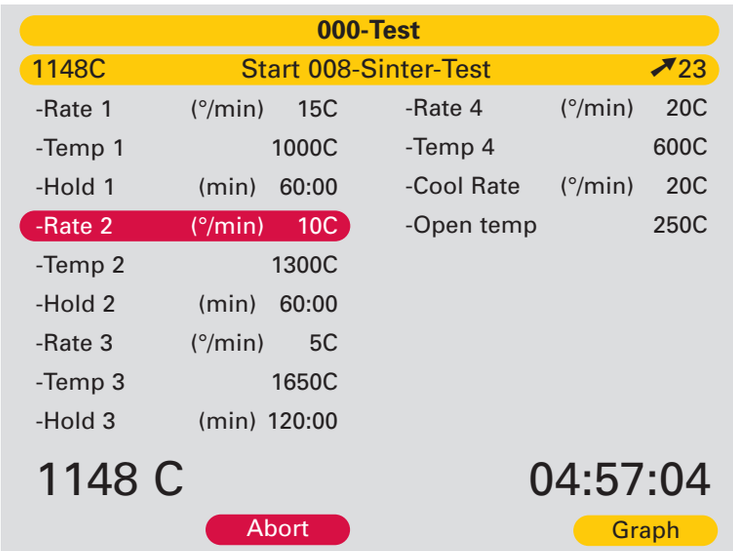

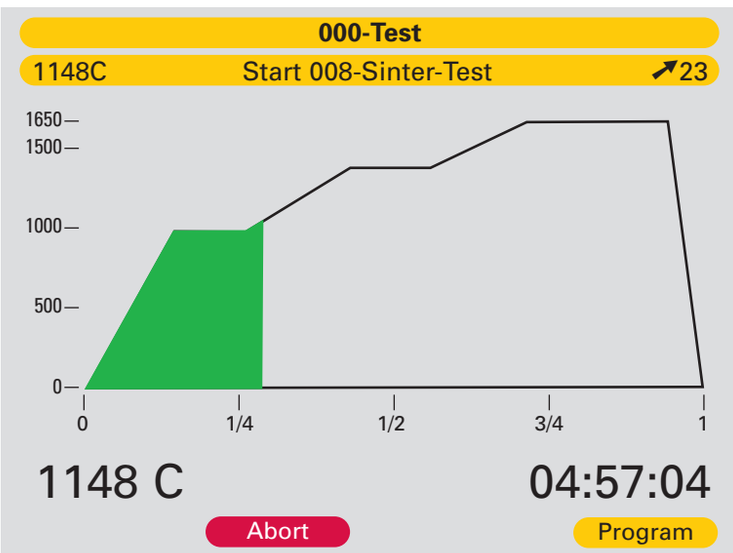

* While the program is running, you can switch between parameter view and graph view by pressing the yellow button.

Run Program

- A program can be started between 250 °C and 400 °C. If muffle temperature is over 250 °C, the oven automatically opens and waits until it reaches 250 °C. After it reaches 250 °C it will continue with the program.
- The most recently run program will always be highlighted after "Run Program" is selected from the "Main Menu". If you wish to select another program, use the +/- buttons or dial to select another program or press the red "Esc" button to go to the "Brand" menu, where you may select another brand that contains the desired program to run.
- Once a program has been selected, Press the green "Enter" button to preview the selected program.
- If Preview Mode is activated - The furnace will show a preview of the program and ask if you want to run this program. Press the green "Yes" button to confirm and run the selected program. Press the red "No" button to return to the previous menu.
- The default view is "Program" mode. This mode displays the program parameters and highlights each parameter as it is running.
- To view the running program in graph mode, press the yellow "Graph" button.
- To abort the program, press the red "Abort" button.
- To activate/deactivate the Preview Mode (see 1.4.5).

Dental Servis
Serdar Ayısıt
0555 274 05 51

1.2 Start with timer

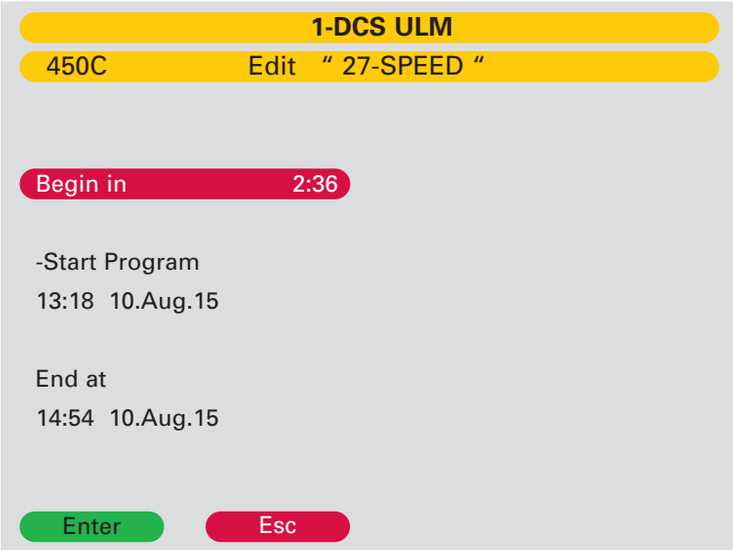

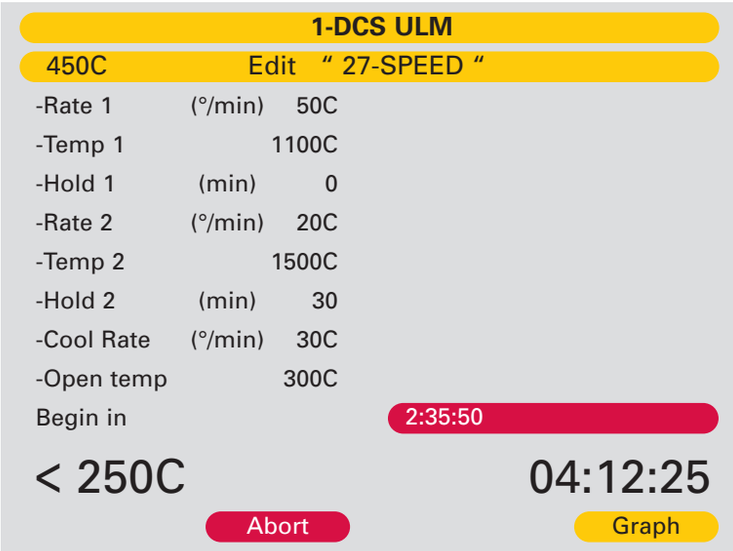

The most recently run program will always be highlighted after "Start with timer" is selected from the "Main Menu". If you wish to select another program, use the +/- buttons or dial to select another program or press the red "Esc" button to go to the "Brand" menu, where you may select another brand that contains the desired program to run.

Once a program has been selected, Press the green "Enter" button to preview the selected program.

If Preview Mode is activated - The furnace will show a preview of the program and ask if you want to run this program. Press the green "Yes" button to confirm and run the selected program. Press the red "No" button to return to the previous menu.

Enter the desired delay time (in hours and minutes). Once selected, the end time of the sintering process will be displayed.

Press the green "Enter" button to continue. The program will now start and finish at the desired time.

Dental Servis
Serdar Ayısıt
0555 274 05 51

1.3 Edit Programs

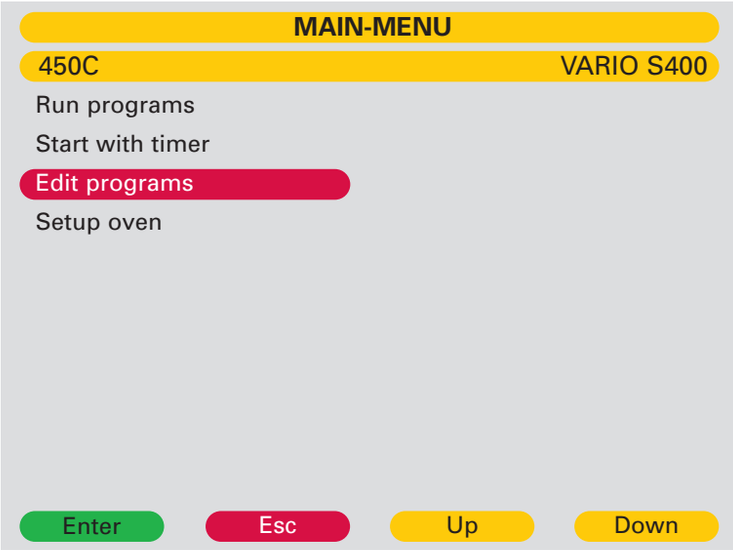

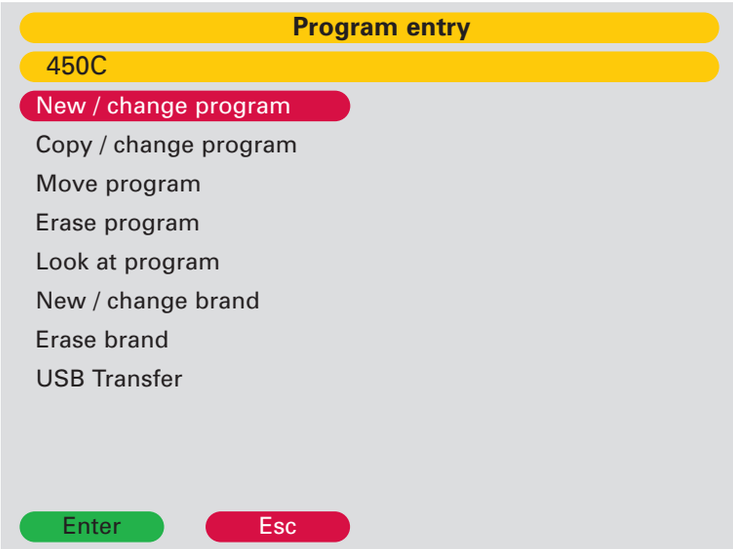

1.3.1 New/change program

- After selecting “Edit Programs” from the “Main Menu” the “Edit Programs” menu is displayed.
- Use the +/- button or the dial to select “New/change program” and press the green “Enter” button.
- Select a brand to place the program in by using the +/- buttons or dial and press the green “Enter” button to continue. Note: A total of 25 brands are available, pressing the yellow “Next” button accesses 5 additional brands.
- Select the program address using the +/- buttons or dial and press the green “Enter” button to continue.
- Name the program by entering the desired letters and numbers using the +/- buttons or dial. Pressing the yellow "Left" or "Right" buttons moves the cursor one place to the left or right respectively.
- The letter or number to be changed has a gray background.
- Press the green "Enter” button to advance and begin editing the program parameters.
- (For more information on programming stages see “Program Types”).
- Select the number of stages desired using the +/- buttons or dial and press the green “Enter” button to continue.
- The sintering parameters for each stage can now be modified using the +/- buttons or the dial.
- Press the green "Enter” button to move to the next parameter.
- The input field jumps one line backwards if the yellow "Up Line" button is pressed.
- The yellow "Last line" button takes you to “Edit done?” Where you can select yes or no.
- Save your entries with the +/- buttons or the dial and the green "Enter" button.
- Once entry is complete, you will be returned to the “Select Brand” menu, where you may repeat the process and enter a new program or press the red “Esc” button to return to the “Edit Programs” Menu.

Dental Servis
Serdar Ayısıt
0555 274 05 51

1 Operation

Program types - 1: Sinter

003-PULSE MC CERAMAY	
450C Edit " 063-PULSE MC DENTIN 1 "	
-Program stages	
-Rate 1	(°/min) 50C
-Temp 1	1100C
-Hold 1	(min) 0min
-Rate 2	(°/min) 20C
-Temp 2	1500C
-Hold 2	(min) 30min
-Cool Rate	(°/min) 30C
-Open temp	300C
-Edit done ?	
Enter	Esc

There are a total of six programmable stages. Five individually programmable heat rates, holding temperatures and holding times. The last stage is always designated as the cooling stage. The cooling stage is programmable and does feature an adjustable cool rate and open temperature.

Programming Stages: Select the number of stages needed for the program, (Remember the last stage is always reserved for cooling parameters.)

Example: A three stage program would have 2 stages of adjustable heat rates, hold temperatures and hold times, while the 3rd and final stage would be for the cool rate and open temperature.

The total allowable hold time for an individual program is 420 minutes. The total individual hold time allowable for any stage is 300 minutes.

Allowable remaining stage times are automatically modified as entries are made.

Stage 1 – Stage 1 has a maximum heat rate of 50°C/min, a minimum temperature of 250°C and a maximum temperature of 1650°C.

Stages 2 to 5: Depending on the desired program, you can program heat rates or cool rates between 1 and 100°C/min.

Hold Temperature 2- 5: Depending on the desired program, you can program temperatures between 350°C and 1650°C.

Holding Time 2 to 5: The maximum combined holding time is 7 hours (420 Min.). Depending on the desired program and prior hold time entries, you can program holding times of between 0 and 300 minutes.

Cooling Rate: Cool rate is for cooling down to the opening temperature. Allowable entry is between 1-50°C/min Opening Temperature: The temperature at which the furnace opens (between 250°C and 400°C).

Edit Done?: To save the program use the +/- buttons or dial to select "YES" or "NO" and press the green "Enter" button to continue.

Dental Servis
Serdar Ayısıt
0555 274 05 51

1-DCS ULM		
450C	Edit	" 27-SPEED "
-Program Stages 3		
-Rate 1	(°/min)	50C
-Temp 1		1100C
-Hold 1	(min)	0min
-Rate 2	(°/min)	20C
-Temp 2		1500C
-Hold 2	(min)	30min
-Cool Rate	(°/min)	30C
-Open temp		300C
-Edit done ?		No
Enter	Esc	

1.3.2 Copy/Change program

- Select the brand containing the program to be copied from the "Brand" menu using the +/- buttons or the dial and press the green "Enter" button to continue.
- Select the program to be copied using the +/- buttons or the dial and press the green "Enter" button to continue.
- The display returns to the "Brand" menu where you may select a new brand group using the +/- buttons or dial. Press the green "Enter" button to continue.
- Select the desired program address to paste the copied program to, using the +/- button or dial and press the green "Enter" button to continue.
- Name the program by entering the desired letters and numbers using the +/- buttons or dial. Pressing the yellow "Left" or "Right" buttons moves the cursor one place to the left or right respectively.
- The letter or number to be changed has a grey background.
- Press the green "Enter" button to advance and begin editing the program parameters.
- For more information on entering parameters see section 1.3.1 "Program Types".
- Select the number of stages desired using the +/- buttons or dial and press the green "Enter" button to continue.
- The sintering parameters for each stage can now be modified using the +/- buttons or the dial.
- Press the green "Enter" button to move to the next parameter.
- The input field jumps one line backwards if the yellow "Up Line" button is pressed.
- The yellow "Last line" button takes you to "Edit done?" Where you can select yes or no.
- Save your entries with the +/- buttons or the dial and the green "Enter" button.
- Once entry is complete, you will be returned to the "Select Brand" menu. Where you may repeat the process and Copy/Change another program or press the red "Esc" button to return to the "Edit Programs" Menu.

Dental Servis
Serdar Ayısıt
0555 274 05 51

1.3.3 Move program

- Once “Move Program” has been selected from the “Edit Programs” menu and the green “Enter” button pressed, you will be prompted to select a brand from the “Brand” menu containing the program to be moved.
- Select the Brand using the +/- buttons or the dial and press the green “Enter” button to continue.
- Select the program to be moved using the +/- buttons or the dial and press the green “Enter” button to continue.
- Select the desired Brand to move the program to using the +/- buttons or the dial and press the green “Enter” button to continue.
- Select the desired address to move the program to using the +/- buttons or the dial and press the green “Enter” button to continue.
- Once the initial move is ompleted, you will be returned to the “Brand” menu where you repeat the process and move another program or press the red “Esc” button to return to the “Edit Programs” menu.

NOTE: Moving a program to an address that is currently populated, will overwrite and erase the existing program.

1.3.4 Erase program

- Once “Erase Program” has been selected from the “Edit Programs” menu, followed with pressing the green “Enter” button. You will be prompted to select from the “Brand” menu a brand containing the program to be erased.
- Select the Brand using the +/- buttons or the dial and press the green “Enter” button to continue.
- Select the program to be erased using the +/- buttons or the dial and press the green “Enter” button to continue.
- The program with all parameters appears together with the question: "Erase this program?”
- Confirm and erase the program by pressing the green “Yes” button Escape from deletion by pressing the red “No” button.
- Once “Yes” or “No” is pressed you will be returned to the “Brand” menu, where you may select a program to erase or press the red “Esc” button to return to the “Edit Programs” menu.

1.3.5 Look at program

- Once “Look at Program” has been selected form the “Edit Programs” menu and the green “Enter” button pressed, you will be prompted to select the brand containing the program to be viewed.
- Using the +/- buttons or dial, select the desired brand and press the green “Enter” button to continue.
- Using the +/- buttons or the dial, select the desired program to be viewed and press the green "Enter" button to continue.
- The individual parameters appear on the display, but cannot be changed.
- Pressing the "OK" button takes you back to the “Brand” menu, where you may select another program to view.

1.3.6 New/change brand

- There are 25 customizable “Brands” (program groups) (indexed from 0 to 24), each with 20 program addresses.
- In the "Edit Programs" menu, use the +/- button or the dial to select "New/Change Brand" and press the green “Enter” button to continue.
- The first 20 nameable brands (program groups) appear on the display. The yellow "Next" button displays the remaining five groups. The yellow “Last” button returns to the display to the first 20 brands.
- Using the +/- buttons or the dial, select the brand (program group) to be named and press the green "Enter" button to continue.
- The letter or number to be changed will be highlighted in gray.
- Select the desired letter or number using the +/- buttons or the dial.
- Pressing the yellow "Left" or "Right" button moves the cursor one place to the left or right respectively.
- Pressing the green "Enter" button saves the entry and takes you to the “Brand” menu to select another brand to name. Press the red “Esc” to return to the “Edit Programs” menu.

Dental Servis
Serdar Ayısıt
0555 274 05 51

1.3.7 Erase brand

- In "Edit Programs" menu, select "Erase Brand" using the +/- buttons or the dial and confirm with the green "Enter" button.
- The first 20 nameable brands (program groups) appear on the display. The yellow "Next" button displays the remaining five groups. The yellow "Last" button returns to the display to the first 20 brands.
- Using the +/- buttons or the dial, select the brand (program group) to be erase and press the green "Enter" button to continue.
- A prompt will appear "Erase this Brand?" to erase the brand; press the green "Yes" button. To exit, press the red "Esc" button.

1.3.8 USB transfer

- In order to load programs from or save programs to a USB device, you need a USB mass-storage device with USB Microsoft protocol and a folder called "VARIO".
- In "Edit Programs" menu, select "USB transfer" using the +/- buttons or the dial and press the green "Enter" button to continue.
- Follow the directions below for saving or loading programs to and from the USB Storage device respectively.

"Send progs to USB" - To save programs to the USB Storage device for emailing or later use

- Make sure your USB Storage device is plugged into the USB port on the side of the oven.
- Use the +/- button or dial to select "Send programs to USB" and press the green "Enter" button to continue.
- You will be prompted to name the file. Select the desired letter or number using the +/- buttons or the dial.
- Pressing the yellow "Left" or "Right" button moves the cursor one place to the left or right respectively.
- The Furnace will begin saving the programs to the USB storage device during which symbols (*) will be displayed across the screen indicating progress. Once completed the display will return to the "Edit Programs" menu.

"Load progs from USB"

NOTE: All programs currently on the S400 will be erased and replaced with the programs being loaded.

- To load programs to the oven from the USB storage device, use the +/- button or dial to select "Load programs from USB" and press the green "Enter" button to continue.
- The available file list will be displayed.
- Using the +/- buttons or the dial, select the program file that you wish to load from the USB device and press the green "Enter" button to continue.

Dental Servis
Serdar Ayısıt
0555 274 05 51

1.4 Setup oven

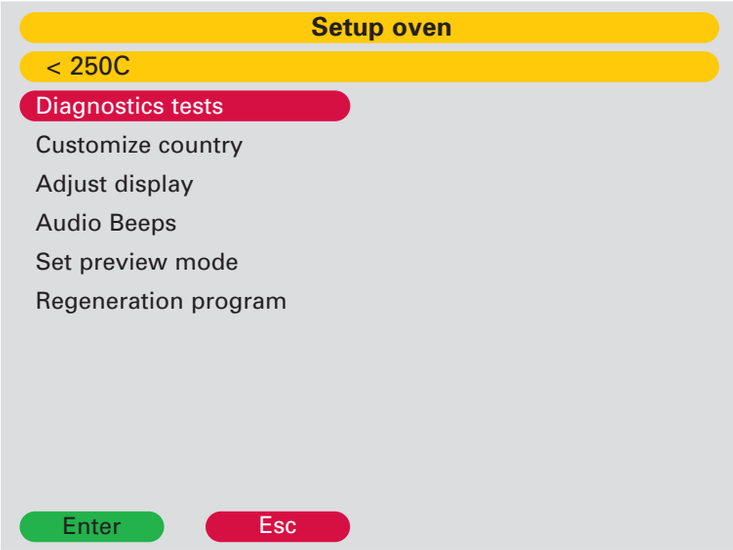

In the “Setup Oven” menu, parameters are set that define the basic functions of the furnace for daily use and are therefore to be entered by the customer according to individual requirements.

From the “Main Menu”, use the +/- buttons or the dial to select, "Setup Oven" and press the green "Enter" button to continue.

1.4.1 Diagnostic Tests

❶ About version
Shows the currently installed software version.

❷ Update Software
Requires the input of a password for updating the software on the unit. For information about software updates or to see if an update is available, please contact your dealer.

❸ Test Lift
Use the yellow “Up” or “Down” buttons to move the lift in the respective to direction. Once the lift has come to the fully UP or fully DOWN position, ensure the corresponding limit switch status is displayed as “On” and the opposing is displayed as “Off”. This test is utilized by service personnel and for troubleshooting purposes.

❹ Factory tests
Factory Tests require a password and are only for the use of authorized personnel

1.4.2 Customize country

In this area the language, the date, time and the units of measurement (metric/imperial) may be selected.

1.4.3 Adjust display

The brightness of the display is subdivided into steps. Use the yellow “Dark” / “Light” buttons to adjust the brightness of the display.

1.4.4 Audio beeps

The "beep" sound can be switched off with yes/no. The sound is then only emitted when the appliance is switched on.

1.4.5 Activate preview

With this function you can view the parameters for the selected program before starting the program.

1.4.6 Regeneration program

When run at monthly intervals; this program increases the element’s protective layer for resistance to oxidation and corrosion, increasing the service life of the heating elements.

Follow the displayed prompts to run the program.

1.4.7 Customized Calibration

User can rise or lower the oven temperature. The real max. end temperature of 1650 °C can not be exceeded. Customized calibration is only active between real 250 °C and 1650 °C.

Dental Servis
Serdar Ayısıt
0555 274 05 51

2 Maintenance

2.1 Fuse

The VARIO S 400 sintering furnace requires the following fuse:

Voltage	240V	230V	220V
Fuse	16 A slow-blow	16 A slow-blow	16 A slow-blow

2.2 Spare parts

	Description	Item Number
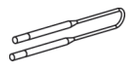	Heating element	896-0402
	Thermocouple type B	896-0401
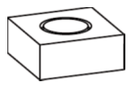	Tray insulation, small	896-0408
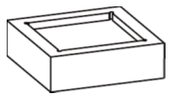	Tray insulation, large	896-0407
	40 g sintering Beads	896-0409
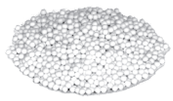	200 g sintering Beads	896-0410
	Spacer ring	896-0406
	multifunctional tray set, single consisting of: - 1 sintering dish - lid for sintering dish	896-0419
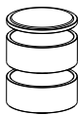	multifunctional tray set, double consisting of: - 2 sintering dishes - lid for sintering dish	896-0418

Dental Servis
Serdar Ayısıt
0555 274 05 51

2.3 Technical explanation

1 When working with sintering beads, gently agitate the objects into the sintering beads:

Use a maximum of 40g sintering beads per sintering tray.

2. Two possibilities to work with the Sintering dish set, double.

Procedure Heat Rate	**Multifunctional tray** ≤ 50°C/min
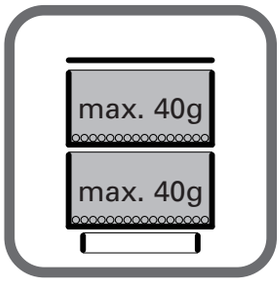	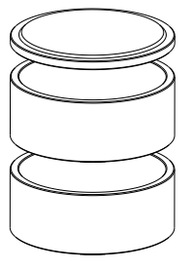
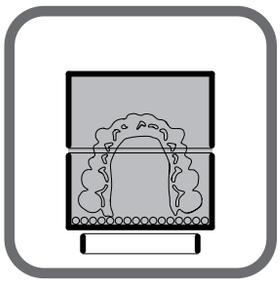	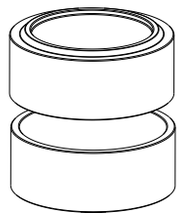

Dental Servis
Serdar Ayısıt
0555 274 05 51

3 Data

3.1 Technical Data

Technical Data:		VARIO S 400
Width x Depth x Height	330mm x 580mm x 830mm	13 x 22.8 x 32,7 inch
Weight	51kg	113 lbs
Voltage	230V/50Hz	220V/60Hz
Effective Power		2000W
Apparent Power		3300VA
Performance Data:		
Temperature:	20°C - 1650°C	68°F - 3002°F
Color Display	120mm x 90mm	4,7 x 3,5 inch
		320 x 240 dots
Programs		500

Environmental conditions

Installation area	closed and dry rooms
Ambient temperature	18°C to 30°C 64°F to 86°F
Relative humidity	up to 30° C 80% No condensation

3.2 Included

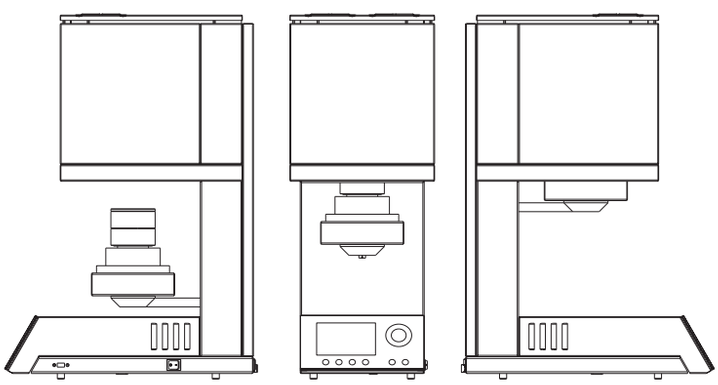

1 VARIO S400
1 power cable
1 USB flash drive
1 tray insulation, large
1 tray insulation, small
1 spare fuse
2 sintering trays
1 sintering lid
1 firing Insulation base tray ring
1 pair of tongs
1 warranty card
1 operating manual

Dental Servis
Serdar Ayısıt
0555 274 05 51

4 Safety warnings!

Never place highly combustible materials such as paper or brushes or highly flammable substances such as methylated spirits, insulation spray or paint near the sintering furnace.

- Use this furnace only for its intended purpose as described in this operating manual and carefully remove all packaging materials and adhesive tape during the installation.
- The appliance may be used indoors only.
- Materials that give off toxic gases must not be sintered.
- Fan openings must not be covered over. Danger of overheating or safety cut-off of the furnace.
- The appliance may be connected only to a separate power socket protected by a 16 A slow-blow fuse with an earth contact and a 30-mA earth leakage circuit breaker.
- Any interruption in the protective earth conductor inside and outside the appliance or loosening of the protective earth connection can lead to the appliance posing a threat to the operator in the event of an error. Intentional interruption is not permissible.
- Position the furnace in a free-standing position. A free space of 200-300 mm must be maintained around and above the furnace. Immediately adjoining walls surrounding the appliance should be made of a non-flammable material. The area should be well ventilated.
- In accordance with fire protection regulations, install a suitable, recommended, multipurpose, dry-foam fire extinguisher near the furnace and make sure that your employees have been instructed how to use it properly.
- Never wear loosely-fitting clothes or clothes that hang down when operating the furnace. Be careful when grasping objects in the vicinity of the furnace. Inflammable material can catch fire if it comes into contact with a hot surface of the appliance. The user can sustain severe burns as a result.
- Do not place the furnace in the immediate vicinity of sources of heat (e.g. burnout furnaces, ceramic and press furnaces).
- Make sure that the furnace has been professionally installed in accordance with our instructions and that the selected electrical connection is properly grounded.
- Use the grounded appliance power cable IEC C19 for 230/240 V.
- The electrical service must be carefully performed and must guarantee that the oven is connected to sufficient voltage. Assign a qualified electrician to install the proper outlet and voltage supply, so that you can be sure that the connection is adequate and that no existing circuit is overloaded.
- Do not use an extension cable with the furnace. Ask your electricity supply company about the electrical connection values that apply to your local grid.
- The temperature may rise more slowly if the voltage is too low.
- Connections should be checked from time to time to ensure that they are correctly seated and that they are not worn or damaged. They should be tightened again or replaced if necessary.
- All cables should be located outside of passageways and corridors.
- High temperatures can be radiated during operation.

Dental Servis
Serdar Ayısıt
0555 274 05 51

4 Safety warnings!

- Do not touch the surface parts, the heating element or the inner surface of the furnace. Hot surfaces can cause severe burns.
- Do not touch the heating element during operation. The heating element is at a voltage of 32V and a current of up to 90A can flow.
- Do not leave the firing chamber unattended immediately after the firing process; close it as quickly as possible.
- Clean the appliance only with dry or slightly moist cloths. Do not use solvents! Always disconnect the mains plug before carrying out this work.
- When heating up the firing chamber, oscillation noises may be emitted by the transformer.
- In case of defects or damage where safe operation is no longer ensured, the appliance must be secured against unintentional use.
- Switch the furnace off and disconnect the mains plug before carrying out recommended and authorized routine maintenance or service work, as otherwise there is a risk of an electric shock, injury or death. Allow the furnace to cool down to room temperature.
- Do not attempt to open the furnace or to repair or replace a part before having read the operating manual, in which the repair or replacement must be expressly recommended. Every unauthorized attempt to repair, replace or open part of your furnace could represent a safety risk and lead to the loss of your warranty. Service work of any kind, regardless of whether or not it is during the warranty period, may be carried out only by our customer service.
- In case of service, only original spare parts are to be used.
- Unauthorized changes to the hardware or software can lead to serious safety risks and the loss of your warranty.
- Never leave children or visitors near a furnace that is in operation. Children must never be allowed to stand or climb onto a surface on which a furnace is standing. Objects that could be of interest to children must never be stored near the furnace. There is a serious risk of injury.
- Retain the original packaging for your VARIO furnace. Use exclusively the original packaging for the transport of these parts. Otherwise, the warranty will be lost if your appliance is not transported properly.
- Transport instructions:
  - Transport the appliance only in an upright position
  - Do not stack several appliances on top of one another
  - The transport must be free of vibrations and shocks as far as possible.
  - Secure against slipping and tipping over during transport.

Dental Servis
Serdar Ayısıt
0555 274 05 51

Release of muffle dust

This furnace contains fragments of ceramic fibres (RCF) and crystalline silicon in the insulation of its heating muffle, which could get into the lungs. These materials may be in the form of fibre boards, vacuum-formed boards, mineral wool pads or loose filling fibres.

- No significant quantities of dust particles from-these materials get into the air during furnace operation. Should it be necessaryto replace the heating elements or insulation, the person carrying out this work will be exposed to much higher-quantities/values.
- Although there is no evidence of risks with regard to long-term damage to health, we expressly recommend that safety precautions be taken when repair personnel handle these materials.
- There is a risk of respiratory diseases for persons directly exposed to the fibre dust treated at high temperatures. A filtered respirator, safety goggles, gloves and long-sleeved clothing should always be worn when handling fibres.
- Avoid the breakage of waste material. Dispose of the fibre waste in sealed containers.
- After direct contact with the skin, rinse with water before carefully washing with soap (do not use cleaning agents). Work clothes must be washed separately.
- Safety data sheets can be provided for the RCF materials on request.

Signs and Symbols

Hazards and risks

This symbol marks safety and hazard instructions whose disregard could lead to injuries to persons. In addition, the appliance and/or other material assets could be damaged.

Risk of sustaining burns

Risk of being crushed

No access for unauthorized persons

Warning of dangerous voltage

Note:

Be sure to read the operating manual before putting into operation! It contains important instructions for the safety, use and maintenance of the appliance. This will help you to protect yourself and prevent damage to the appliance.

5 Service

Zubler USA
4220 Steve Reynolds Blvd.
Suite 24
Norcross, GA 30093
Telephone: 770-921-2131
Email: sales@zublerusa.com
www.zublerusa.com

Zubler Gerätebau GmbH
Buchbrunnenweg 26
89081 Ulm-Jungingen
Telefon: +49(0)731-14520
Fax: +49(0)731-145213
mail: info@zubler.de
www.zubler.de

Dental Servis
Serdar Ayısıt
0555 274 05 51

Dental
Servis
Serdar Ayısıt
0555 274 05 51

en

m-VS400- en 29-2019
technical changes without notice!

zubler®
dental & technik

CE

www.zubler.de
Zubler Gerätebau GmbH
Buchbrunnenweg 26
D-89081 Ulm-Jungingen

Dental Servis
Serdar Ayısıt
0555 274 05 51